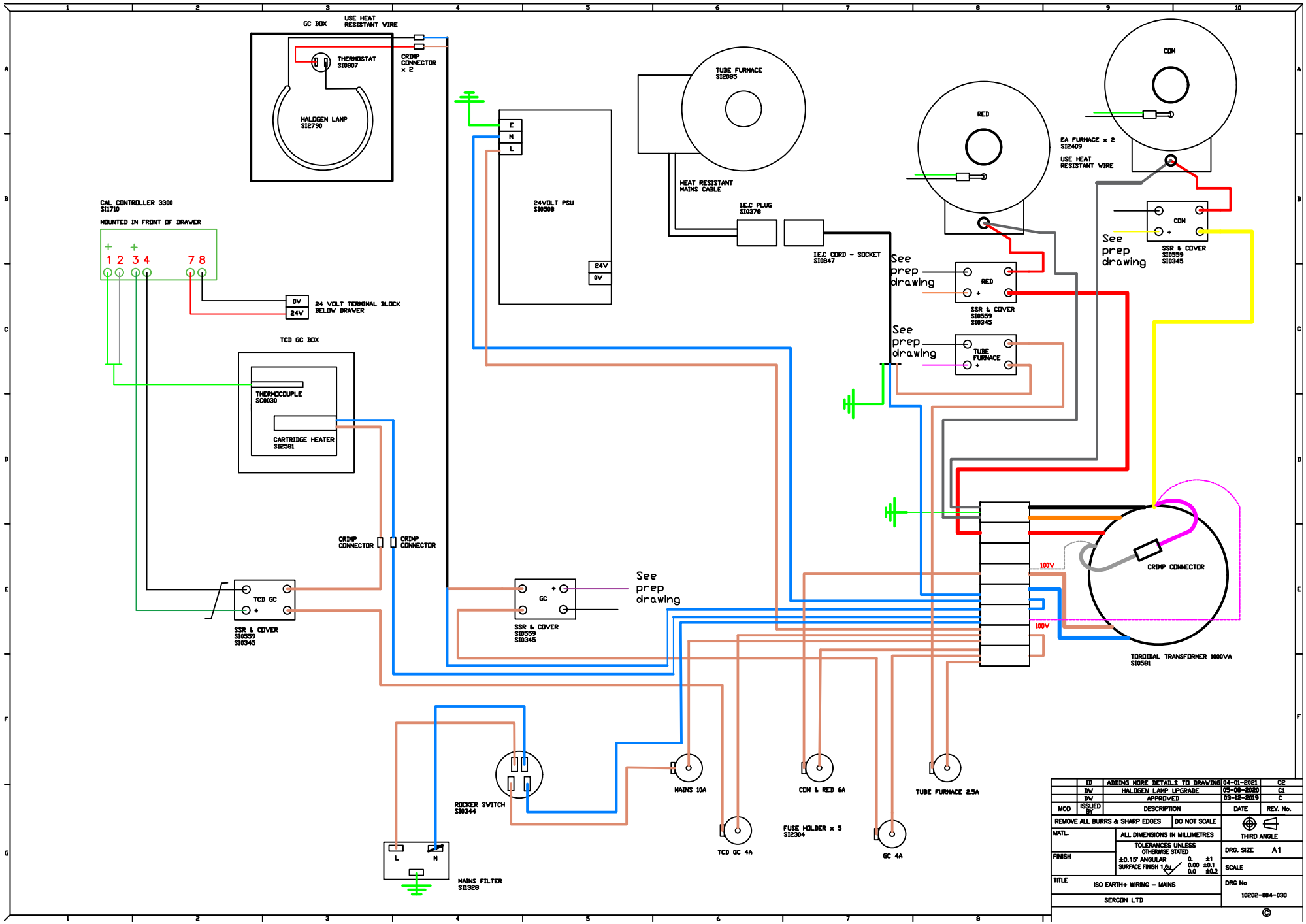
USE HEAT RESISTANT WIRE
GC BOX
THERMOSTAT SI0807
CRIMP CONNECTOR x 2
HALOGEN LAMP SI2790
E
N
L
24VOLT PSU SI0508
24V
0V
TUBE FURNACE SI2085
HEAT RESISTANT MAINS CABLE
I.E.C PLUG SI0378
I.E.C CORD - SOCKET SI0847
RED
CDM
EA FURNACE x 2 SI2409
USE HEAT RESISTANT WIRE
CAL CONTROLLER 3300 SI1710
MOUNTED IN FRONT OF DRAWER
1 2 3 4 7 8
0V
24V
24 VOLT TERMINAL BLOCK BELOW DRAWER
See prep drawing
SSR & COVER SI0559 SI0345
TCD GC BOX
THERMOCOUPLE SC0030
CARTRIDGE HEATER SI2581
CRIMP CONNECTOR
TCD GC
GC
100V
CRIMP CONNECTOR
TOROIDAL TRANSFORMER 1000VA SI0581
ROCKER SWITCH SI0344
MAINS 10A
CDM & RED 6A
TUBE FURNACE 2.5A
TCD GC 4A
FUSE HOLDER x 5 SI2304
GC 4A
L
N
MAINS FILTER SI1328
ID ADDING MORE DETAILS TO DRAWING 04-01-2021 C2
DV HALOGEN LAMP UPGRADE 05-08-2020 C1
DV APPROVED 03-12-2019 C
MOD ISSUED BY DESCRIPTION DATE REV. No.
REMOVE ALL BURRS & SHARP EDGES DO NOT SCALE
MATL.
ALL DIMENSIONS IN MILLIMETRES
FINISH
TOLERANCES UNLESS OTHERWISE STATED
±0.15° ANGULAR
SURFACE FINISH 1.6µ
0. ±1
0.00 ±0.1
0.0 ±0.2
THIRD ANGLE
DRG. SIZE A1
SCALE
TITLE
ISO EARTH+ WIRING - MAINS
SERCON LTD
DRG No
10202-004-030
©